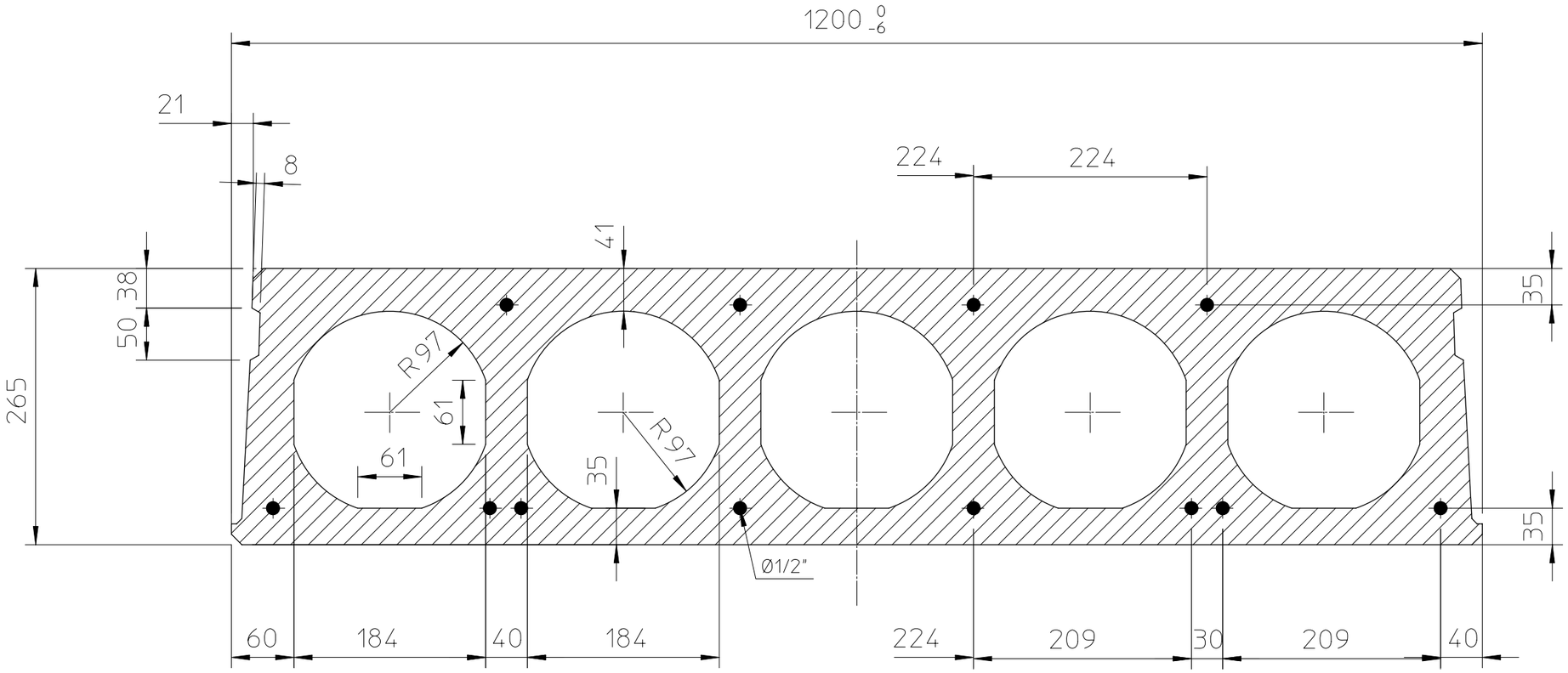

Area of Cross-Section	1642 cm^2
Theoretical Weight of the Slab	328 kg/m^2 (+ Strands)
Density	2400 kg/m^3

LITZEN

QUERSCHNITTFLÄCHE

THEORETISCHES GEWICHT DER DECKE

DICHTE

САЛАВАТ

Scale 1:5	Material A3L	Total weight kg	b	1	CHANGED DETAILS	22.07.1999	JANNE
		Material weight kg	a	1	LIS. KYRILIIKKA	18.12.1997	LJO
			Rev.	Times	Change	Date	Name
Measures mm	Surface texture Ra (µm)	General tolerance	Drawn JSP 04.01.1994		PCE PCE Engineering Oy Ab Box 33 SF-37801 TOIJALA	Dwg No. P330988	
			Check.				
			Appr.				

Belongs to	Part	pcs	Job No.	Description
				ONTELOLAATTA HOLLOW CORE SLAB P5/265 HOHLPLATTE P5/265